CLASS 150 CAST STEEL GATE VALVE FLANGED ENDS

KITZ Fig: 150SCLS

Sizes: 11/2-24inch(40-600mm)
BOLTED BONNET, OUTSIDE SCREW & YOKE.
Standards
. End to End: ASME B16.10 CLASS 150
. End Connection: ASME B16.5 CLASS 150
. Wall Thickness: API 600 CLASS 150
Test Standard
. API 598

Dimensions

SIZE(inch/mm)		L	L1	H	D1	Kg
11/2	40	165.0	0.0	385.0	200.0	0.00
2	50	178.0	0.0	385.0	200.0	0.00
21/2	65	190.0	0.0	432.0	200.0	0.00
3	80	203.0	0.0	506.0	250.0	0.00
4	100	229.0	0.0	589.0	250.0	0.00
5	125	254.0	0.0	658.0	300.0	63.00
6	150	267.0	0.0	755.0	300.0	0.00
8	200	292.0	0.0	955.0	350.0	0.00
10	250	330.0	0.0	1158.0	400.0	0.00
12	300	356.0	0.0	1358.0	450.0	0.00
14	350	381.0	0.0	1570.0	600.0	0.00
16	400	406.0	0.0	1690.0	600.0	0.00
18	450	432.0	0.0	1903.0	680.0	0.00
20	500	457.0	0.0	2118.0	680.0	0.00
24	600	508.0	0.0	2493.0	760.0	0.00

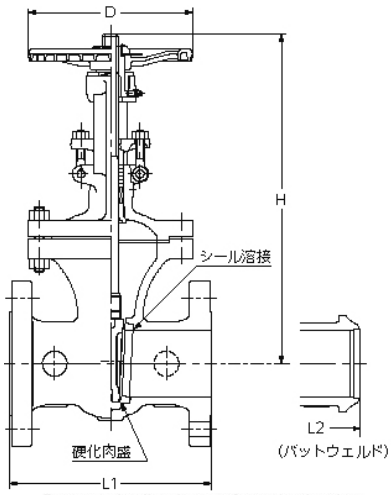

For more details, please refer to the drawing.

Material List

NAME OF PART	MATERIAL	SPECIFICATION
BODY	CAST STEEL	A216 Gr.WCB/SCPH2
BONNET	CAST STEEL	A216 Gr.WCB/SCPH2
STEM	STAINLESS STEEL	403SS
DISC	STAINLESS STEEL	A217 Gr.CA15

Specifications
CLASS 150 CAST STEEL GATE VALVE FLANGED ENDS,BOLTED BONNET, OUTSIDE SCREW & YOKE.
End to End : ASME B16.10 CLASS 150,End Connection : ASME B16.5 CLASS 150,Wall Tchickness : API 600 CLASS 150,Test Standard : API 598,Sizes : 11/2-24inch(40-600mm),BODYMATERIAL :CAST STEEL,BONNETMATERIAL :CAST STEEL,STEMMATERIAL :STAINLESS STEEL,DISCMATERIAL :STAINLESS STEEL,KITZ Fig : 150SCLS

Pressure-temperature ratings and other performance data published in this catalog have been developed from our design calculation, in-house testing, field reports provided by our customers and/or published official standards or specifications. They are good only to cover typical applications as a general guideline to users of KITZ products introduced in this catalog. For any specific application, users are kindly requested to contact KITZ Corporation for technical advice, or to carry out their own study and evaluation for proving suitability of these products to such an application. Failure to follow this request could result in property damage and/or personal injury, for which we shall not be liable. Read instruction manual carefully before use.

KITZ CORPORATION Tokyo Shiodome Building, 1-9-1, Higashi-Shimbashi, Minato-ku, Tokyo 105-7305, Japan
© KITZ Corporation. All Right Reserved.
ISO 9001 CERTIFIED Since 1989